Mill Enclosure

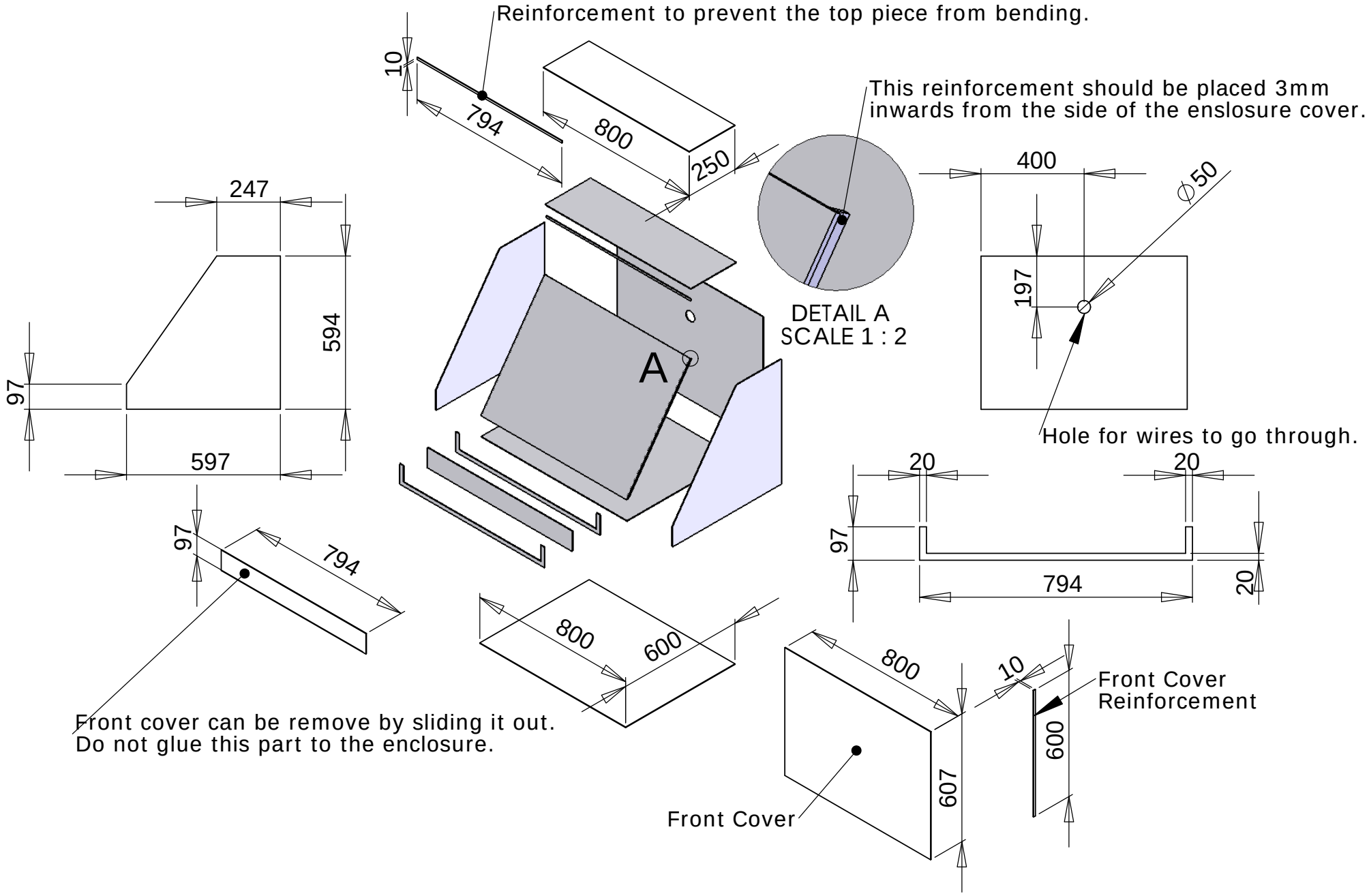

Paper Size: A4, Scale: 1:20, Unit of Measure: mm, Material: 3mm Acrylic

www.ixen-cnc.com